| REVISIONS | | | | | | | |
|---|---|---|---|---|---|---|---|
| REV | ZONE | ECN NO. | DESCRIPTION | BY | DATE | CKR | APP |

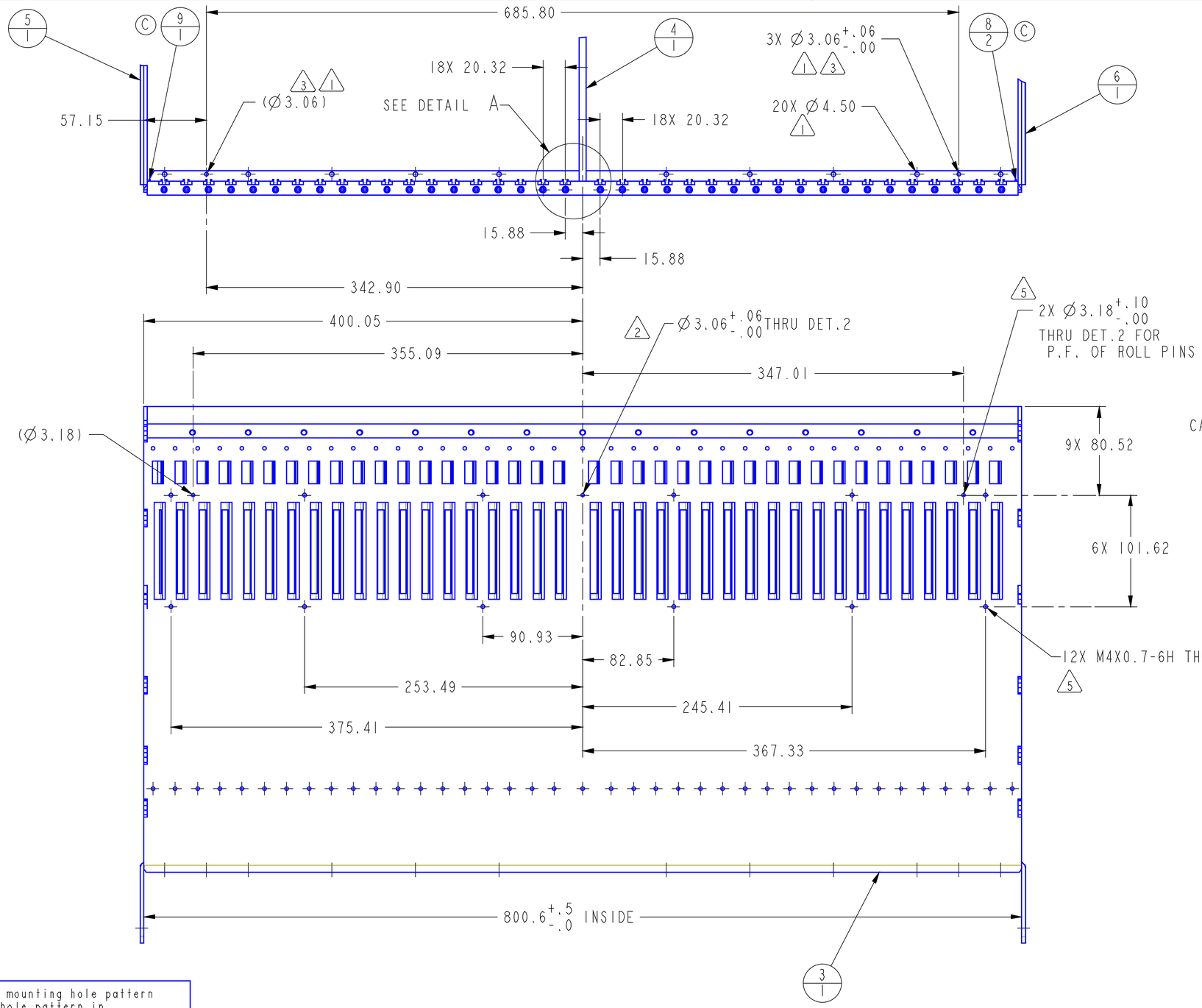


FRONT
SCALE 0.500

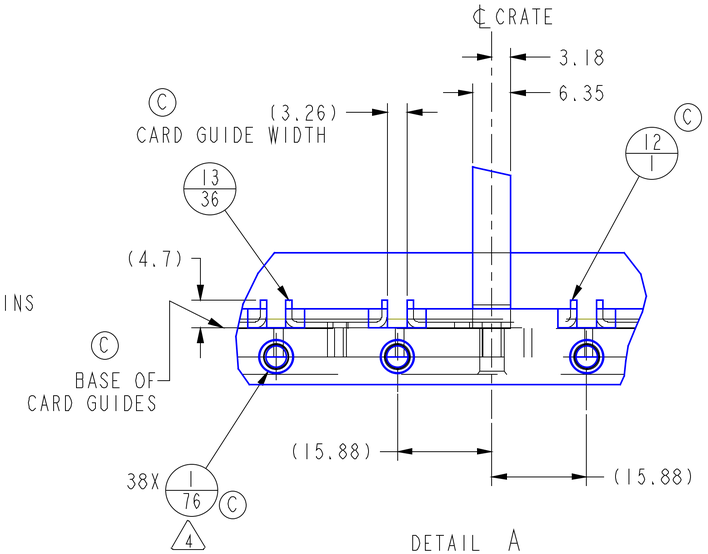


DETAIL A
SCALE 2.000
FEB SLOT

| DET | QTY | MODEL NAME / DESCRIPTION | TYPE | DRAWING NUMBER |
|---|---|---|---|---|
| 13 | 36 | RAIL_FRONT_PANEL | PART | ZOBER/5052 Alum. |
| 12 | 1 | RAIL_CENTER_FRONT | PART | ZOBER/5052 Alum. |
| 11 | 37 | RAIL_BACK_PANEL_ | PART | ZOBER/5052 Alum. |
| 10 | 1 | RAIL-SHORT-BACK | PART | ZOBER/5052 Alum. |
| 9 | 1 | RAIL-RS-SHORT | PART | ZOBER/5052 Alum. |
| 8 | 2 | RAIL-LS-SHORT | PART | ZOBER/5052 Alum. |
| 7 | 1 | RAIL-CENTER-BACK | PART | ZOBER/5052 Alum. |
| 6 | 1 | CRATE_SIDE_PANEL-RIGHT | PART | ZOBER/5052 Alum. |
| 5 | 1 | CRATE_SIDE_PANEL-LEFT | PART | ZOBER/5052 Alum. |
| 4 | 1 | CENTER_PANEL_ | PART | ZOBER/5052 Alum. |
| 3 | 1 | FRONT_PANEL_SUB-ASSY_ | ASSEMBLY | ZOBER/5052 Alum. |
| 2 | 1 | BACK_PANEL_SUB-ASSY_ | ASSEMBLY | ZOBER/5052 Alum. |
| 1 | 76 | M4X07X6_TIMESERT_PN_14071 | PART | SEE NOTE 4 |

5 POWER_BUS mounting hole pattern to match hole pattern in POWER_BUS_ASSEMBLY_B, GBL20011-691001, REV.B

4 TIME FASTENER COMPANY, INC.
5301 -G LONGLEY LANE
RENO, NEVADA 89511
TEL: 800-423-4070
WWW.TIMESERT.COM
P/N: 14071 M4X0.7 X 6mm lg.

Notes: Unless otherwise specified:

THIRD ANGLE PROJECTION

GBL20011-731001/732001
NEXT ASSEMBLY

INTERPRET IN GENERAL ACCORDANCE WITH ASME Y14.5M-1994
UNLESS OTHERWISE SPECIFIED: ALL DIMENSIONS ARE IN MILLIMETERS
DECIMAL TOLERANCES
X.X ±0.4
X.XX ±0.13
X.XXX ±0.025
ANGLES ± 0.6

3.2 FINISH — BREAK EDGES: 0.4 MAX. 0.1 MIN.

| | | |
|---|---|---|
| DRAWN BY | J. FARRELL | 27-Jan-12 |
| CHECKED BY | | |
| DESIGN ENGINEER | | |
| ENGINEER APPROVAL | | |
| Q.A. APPROVAL | | |
| SAFETY ENGINEER | | |

CDD DWG NUMBER

BROOKHAVEN NATIONAL LABORATORY
managed by Brookhaven Science Associates for the U.S. Department of Energy
Upton, NY 11973

PROJECT: ATLAS ELECTRONICS CRATE
SYSTEM: FRONT END CRATE
MODEL/DRAWING NAME: CRATE_SUB-ASSY

SIZE D — DRAWING NUMBER: GBL20011-671000 — REV C

Q.A. CATAGORY: 4 — SCALE: 0.500 — WEIGHT: — SHEET 3 of 4

SHEET 3 OF 4 — DWG NO 671000-C — REV