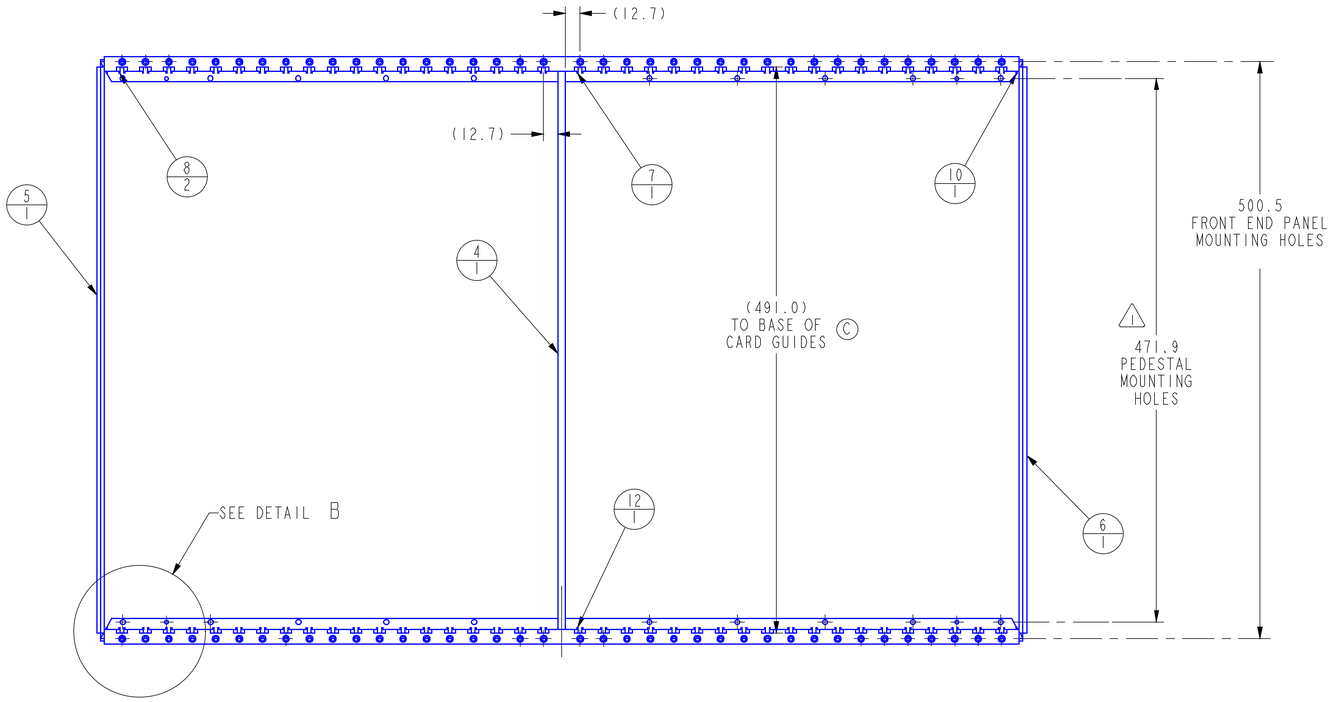

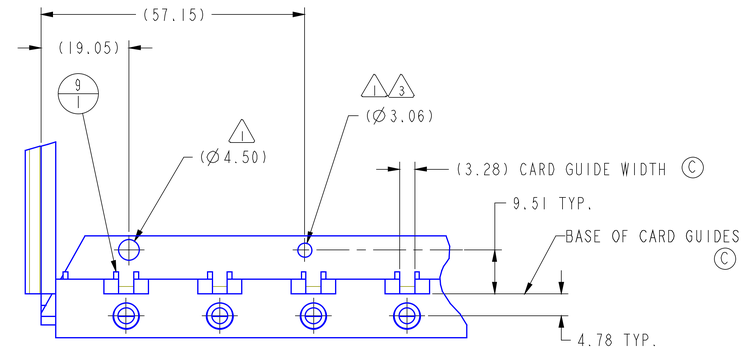

DETAIL B
SCALE 2.000

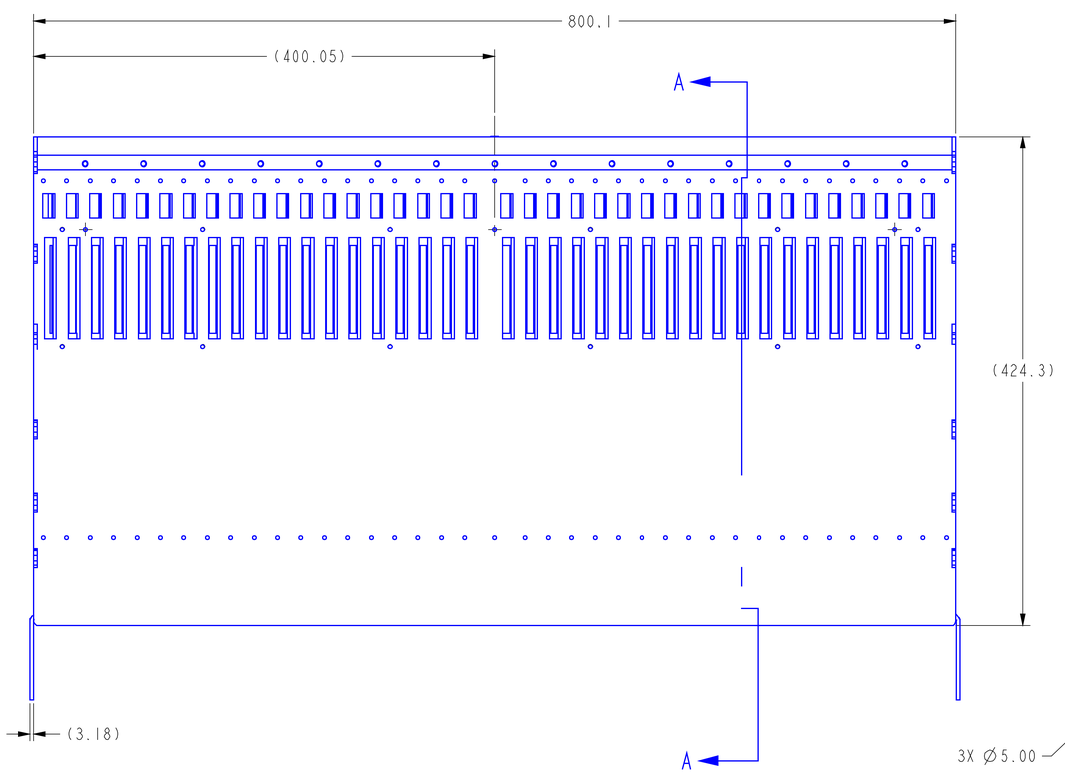

FRONT
SCALE 0.500

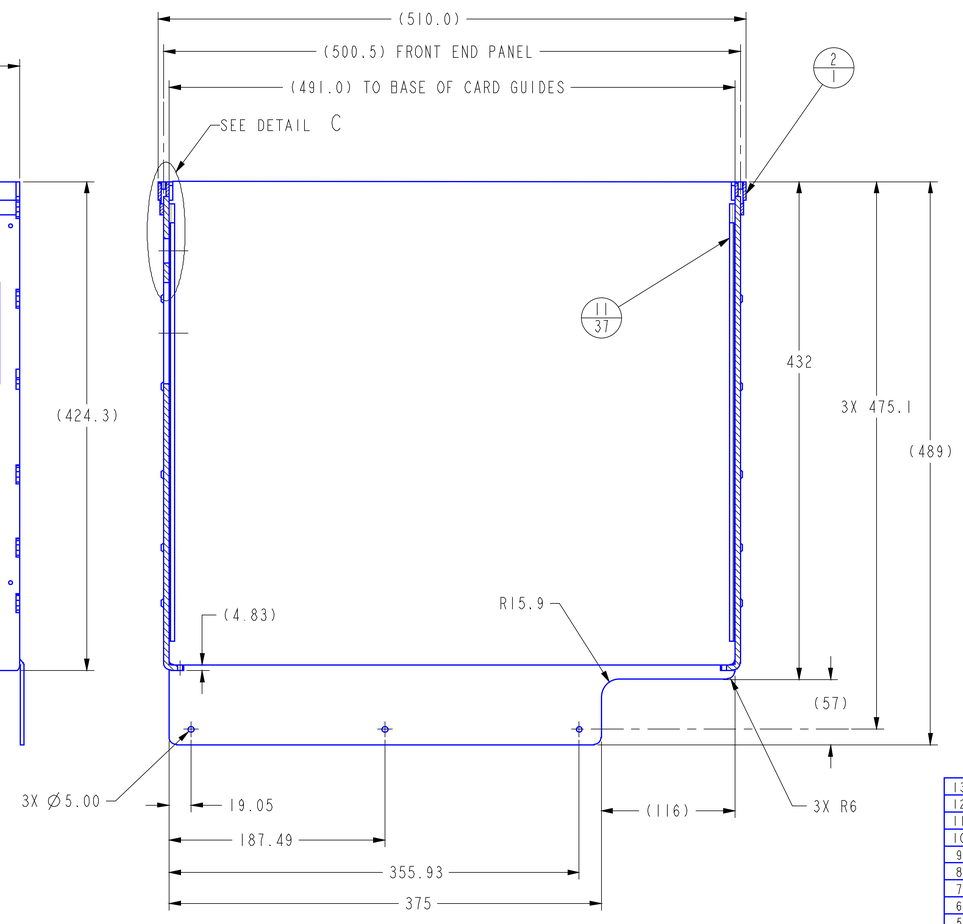

SECTION A-A
TYPICAL BOTH SIDES

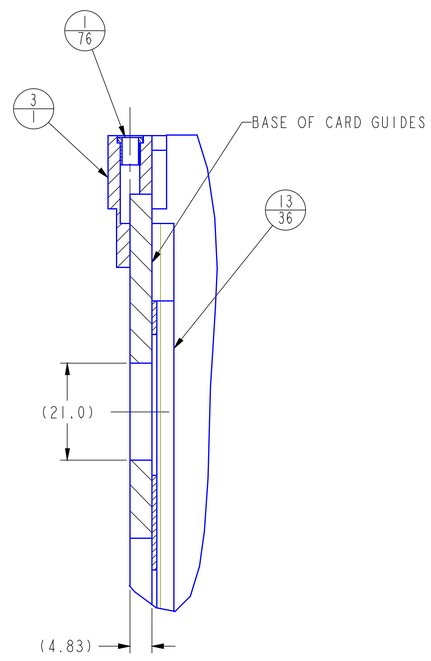

DETAIL C
SCALE 2.000

DET	QTY	MODEL NAME / DESCRIPTION	TYPE	DRAWING NUMBER
13	36	RAIL_FRONT_PANEL	PART	ZOBER/5052 Alum.
12	1	RAIL_CENTER_FRONT	PART	ZOBER/5052 Alum.
11	37	RAIL_BACK_PANEL_	PART	ZOBER/5052 Alum.
10	1	RAIL-SHORT-BACK	PART	ZOBER/5052 Alum.
9	1	RAIL-RS-SHORT	PART	ZOBER/5052 Alum.
8	2	RAIL-LS-SHORT	PART	ZOBER/5052 Alum.
7	1	RAIL-CENTER-BACK	PART	ZOBER/5052 Alum.
6	1	CRATE_SIDE_PANEL-RIGHT	PART	ZOBER/5052 Alum.
5	1	CRATE_SIDE_PANEL-LEFT	PART	ZOBER/5052 Alum.
4	1	CENTER_PANEL_	PART	ZOBER/5052 Alum.
3	1	FRONT_PANEL_SUB-ASSY_	ASSEMBLY	ZOBER/5052 Alum.
2	1	BACK_PANEL_SUB-ASSY_	ASSEMBLY	ZOBER/5052 Alum.
1	76	M4X07X6_TIMESERT_PN_14071	PART	SEE NOTE 4

3	FOR S.F. OF M3 DOWEL PINS -CRATE TO PEDESTAL ALIGNMENT
2	FOR S.F. OF M3 DOWEL PIN -CRATE TO POWERBUS ALIGNMENT
1	PEDESTAL MOUNTING HOLE pattern to match hole pattern in BARREL PEDESTAL-STANDARD; GBL20011-681002.
	Notes: Unless otherwise specified:

REVISIONS

REV	ZONE	ECN NO.	DESCRIPTION	BY	DATE	CKR	APP

THIRD ANGLE PROJECTION

GBL20011-751001/752001
GBL20011-731001/732001
NEXT ASSEMBLY

BROOKHAVEN NATIONAL LABORATORY
managed by Brookhaven Science Associates for the U.S. Department of Energy
Upton, NY 11973

INTERPRET IN GENERAL ACCORDANCE WITH ASME Y14.5M-1994
UNLESS OTHERWISE SPECIFIED:
ALL DIMENSIONS ARE IN MILLIMETERS
DECIMAL TOLERANCES
X. ±0.4
X.XX ±0.13
X.XXX ±0.025
ANGLES ± 0.5

DRAWN BY: J. FARRELL 27-Jun-02
CHECKED BY:
DESIGN ENGINEER:
ENGINEER APPROVAL:
Q.A. APPROVAL:
SAFETY ENGINEERING:

3.2 FINISH
BREAK EDGES: 0.4 MAX. 0.1 MIN.

CDD DWG NUMBER

PROJECT: ATLAS ELECTRONICS CRATE
SYSTEM: FRONT END CRATE
MODEL/DRAWING NAME: CRATE_SUB-ASSY
SIZE: E
DRAWING NUMBER: GBL20011-671000
REV. C
Q.A. CATAGORY: 4
SCALE: 0.500
WEIGHT:
SHEET 2 OF 4

DWG NO 671000-C
SHEET 2 OF 4